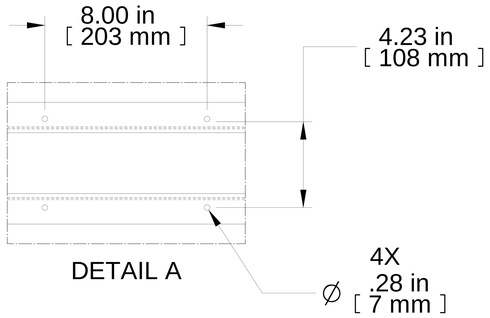

DETAIL A

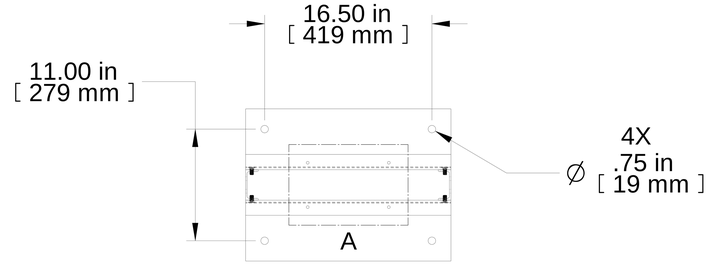

TOP VIEW

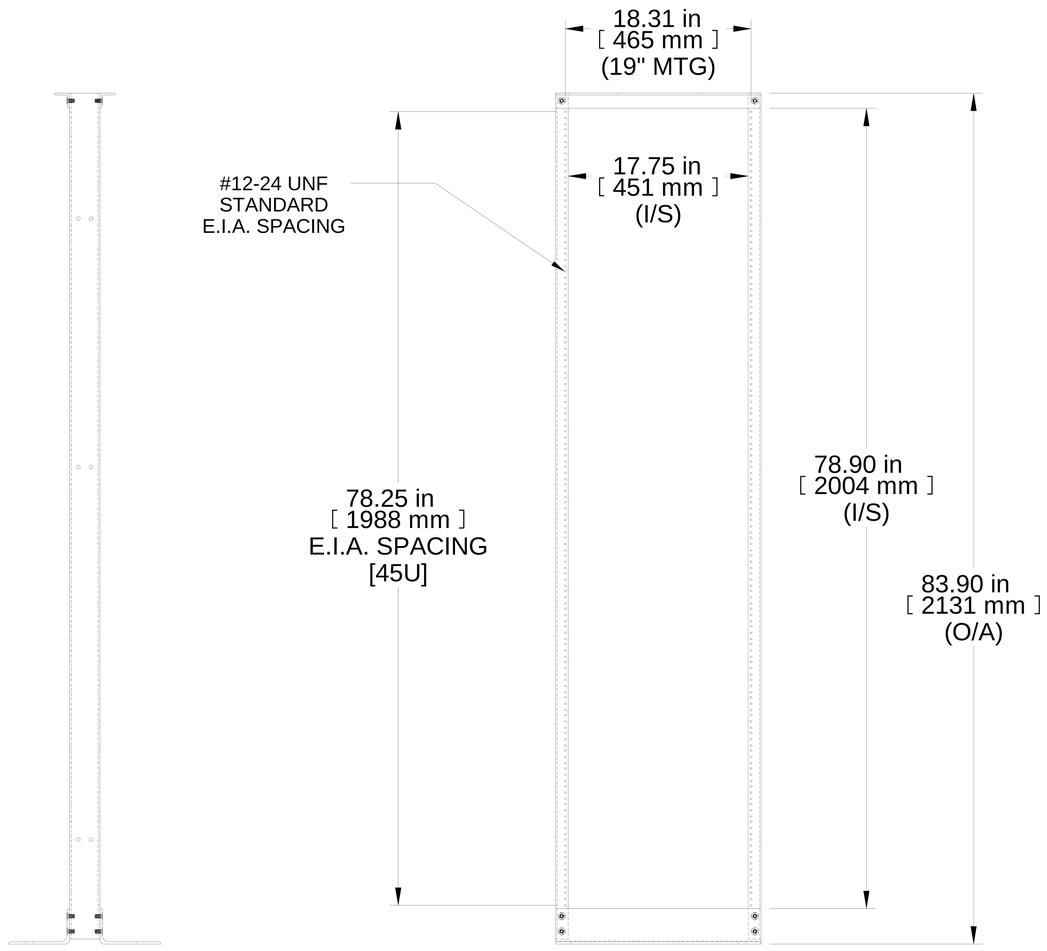

L.S. VIEW

FRONT VIEW

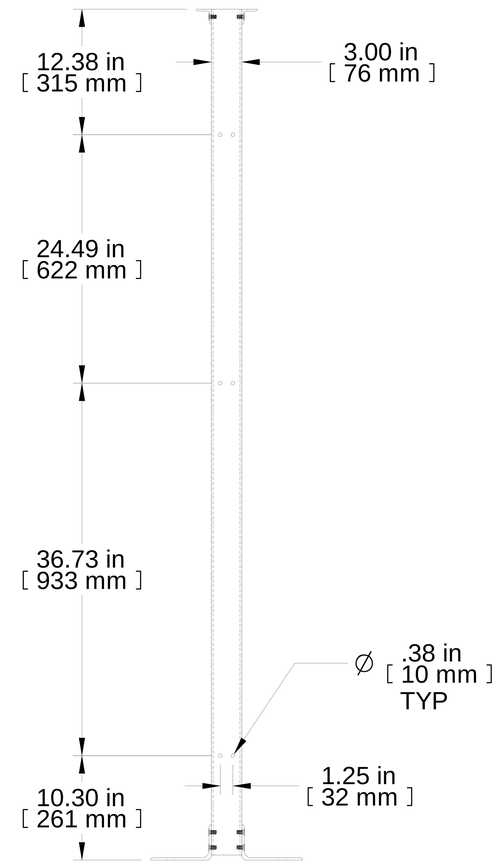

R.S. VIEW

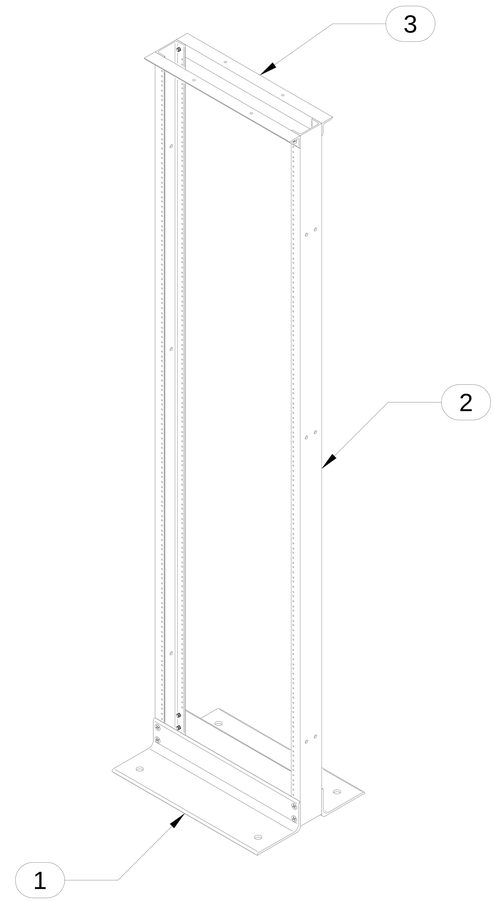

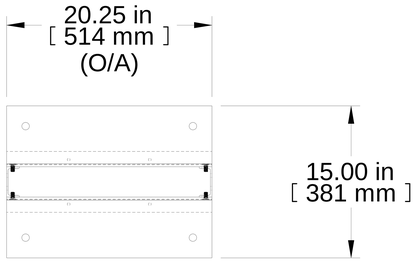

BOTTOM VIEW

Item Number	Title	Quantity
1	RELAY RACK FOOT 19W	2
2	RELAY RACK VERTICAL 45U	2
3	RELAY RACK TOP BRKT 19W	2

PART NUMBERS

RB-2PA1945BK	BLACK ANODIZED

NOTES

ASSEMBLY HARDWARE INCLUDED
SHIPPED KNOCK-DOWN FOR EASE AND PROTECTION
SEE HAMMOND WEBSITE FOR MORE INFORMATION

Français

Pour tous les détails sur nos produits, svp veuillez consulter notre site www.hammondmfg.com

Data subject to change without notice. Isometric drawing not to scale.
Les données sont sujettes à changement sans préavis.

RACK BASICS®

www.hammondmfg.com

PART NO. **RB-2PA1945BK**