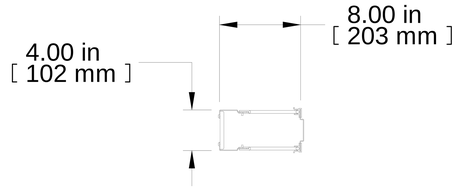

TOP VIEW

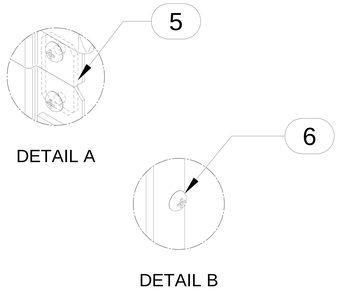

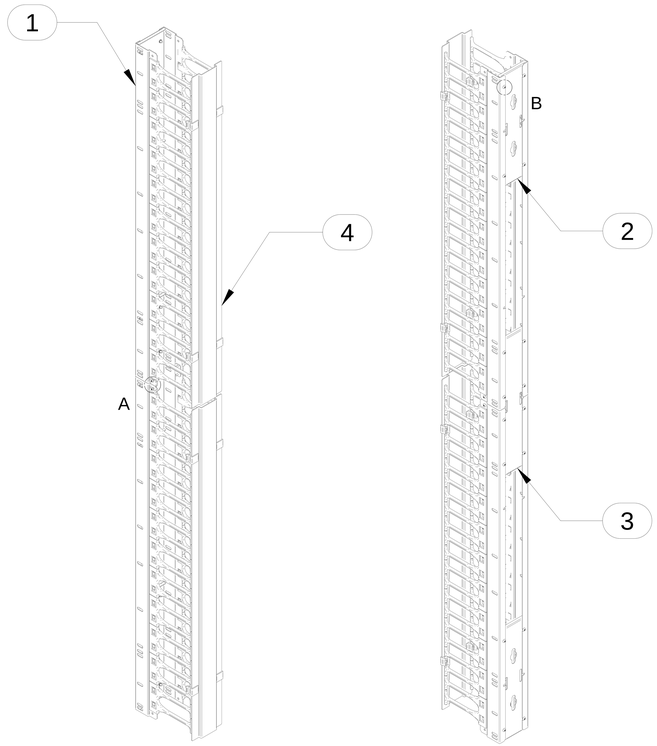

ISOMETRIC FRONT VIEW

ISOMETRIC REAR VIEW

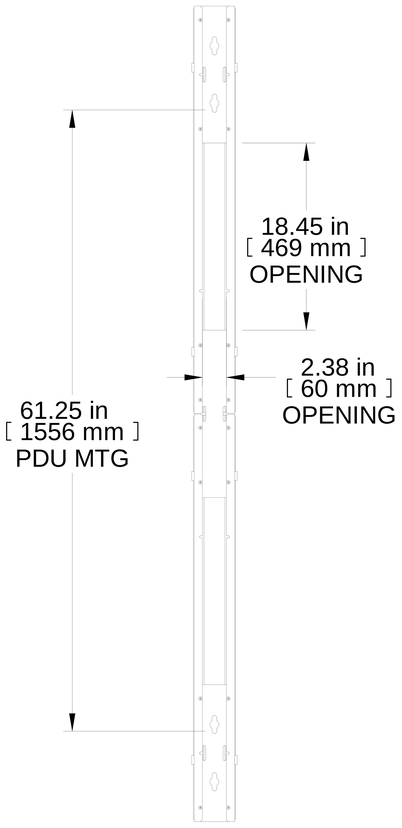

REAR VIEW

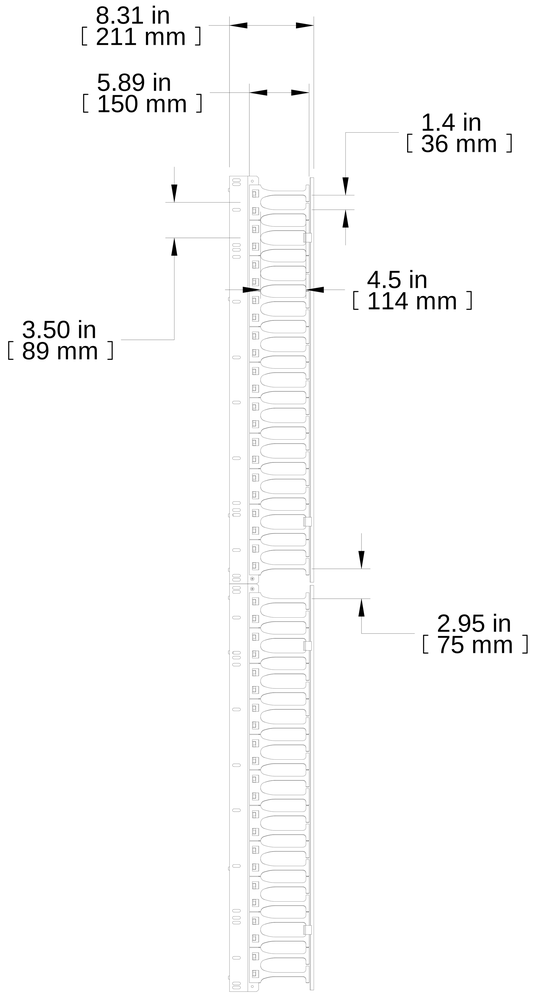

FRONT VIEW

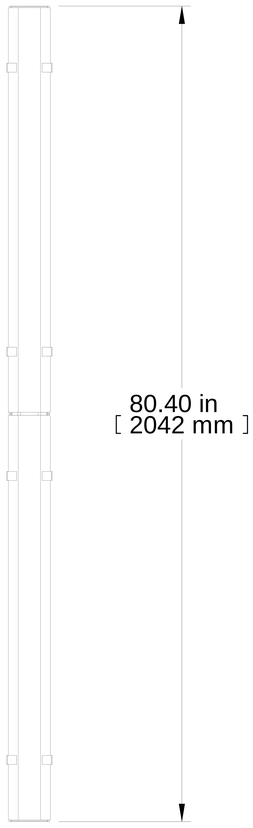

R.S VIEW

Item Number	Title	Quantity
1	FINGER BRKT W/FINGERS ASS'Y	4
2	RB-VFM END CONNECTOR BRKT	2
3	RB-VFM MID CONNECTOR BRKT	1
4	RB-VFM MNGR DOOR W/CLIPS	2
5	RB-VFM CONNECTOR PLATE	2
6	SCREW 10-32 x 3/8", BLK	20

PART NUMBERS	
RB-VFM45-4-1	PAINTED BLACK

Includes assembly hardware
Includes mounting hardware
Shipped flat packed

Français

Pour tous les détails sur nos produits, svp veuillez consulter notre site www.hammondmfg.com

Data subject to change without notice. Isometric drawing not to scale.
Les données sont sujettes à changement sans préavis.

RACK BASICS®

www.hammondmfg.com

PART NO. **RB-VFM45-4-1**