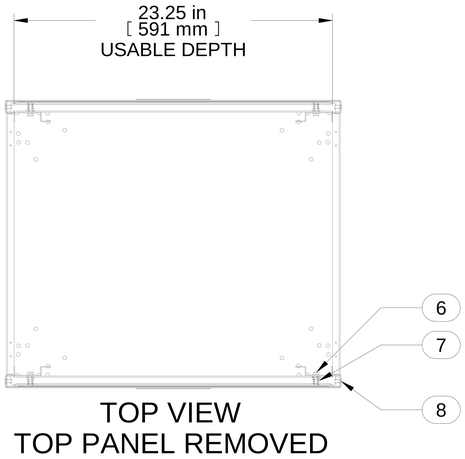


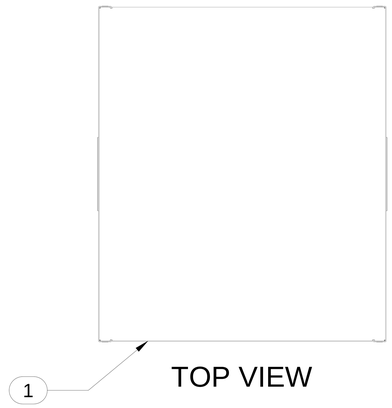


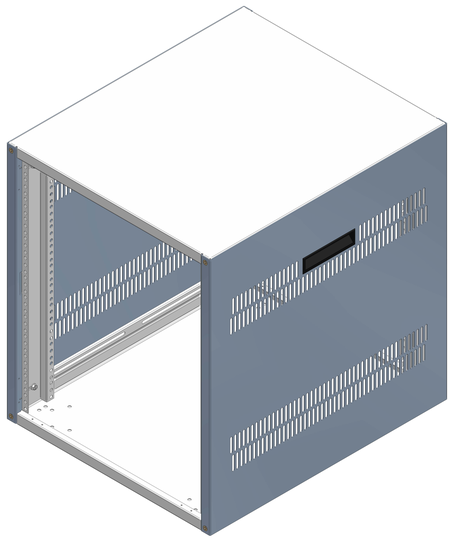


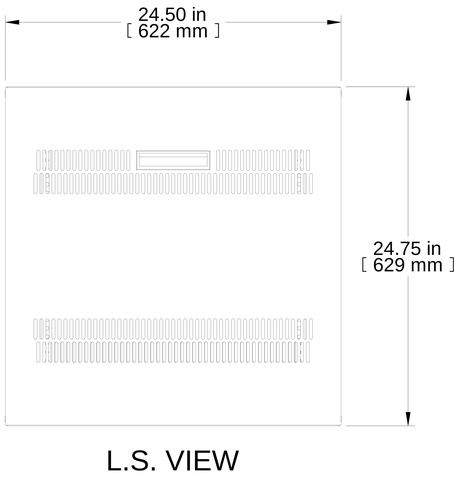


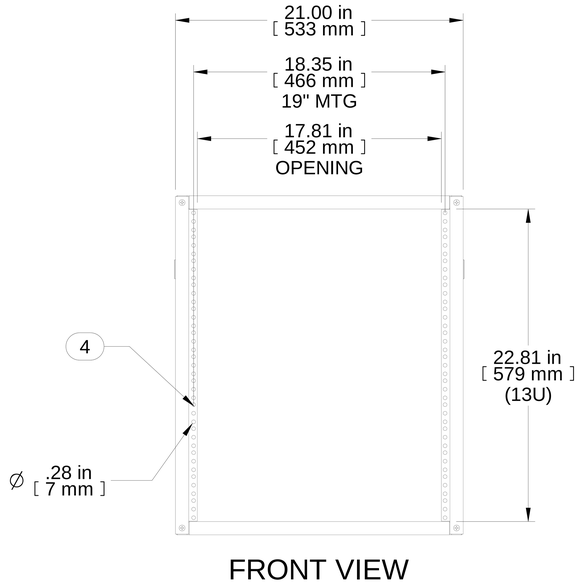


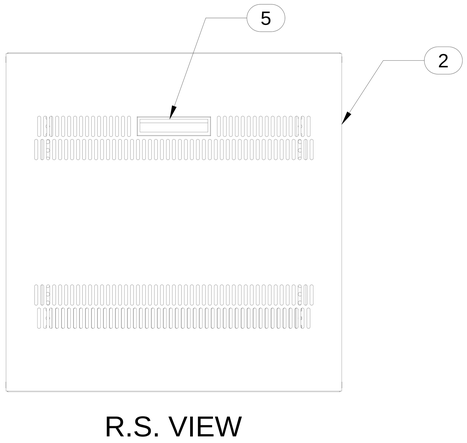


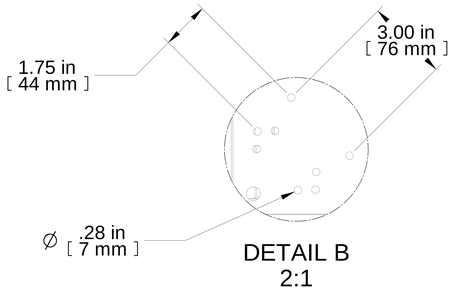


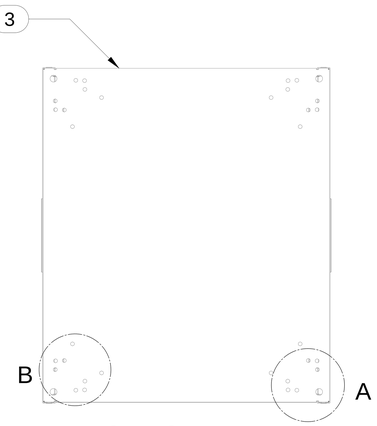


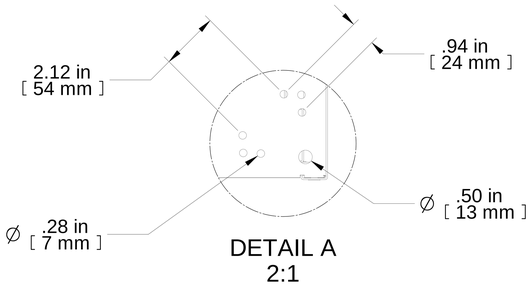


| Item Number | Title | Quantity |
|---|---|---|
| 1 | RCHS/V TOP PANEL ASM | 1 |
| 2 | RCHS K.D. - SIDE | 2 |
| 3 | RCHS/V BOTTOM PANEL ASM | 1 |
| 4 | RCHS K.D. - PUNCHED COMBO RAILS | 4 |
| 5 | BLACK PLASTIC HANDLE | 2 |
| 6 | SCREW 1/4-20X1/2 HEX SLOT BOLT | 8 |
| 7 | NUT 1/4-20 SPRING | 8 |
| 8 | SCREW M6 X 1.0 X 12MM | 8 |

**PART NUMBERS**

| | |
|---|---|
| RCHV1902224BK1 | PAINTED BLACK TEXTURED |

**NOTES**

Shipped knockdown for handing ease and protection.

**Français**

Pour tous les détails sur nos produits,
svp veuillez consulter notre site www.hammondmfg.com

Data subject to change without notice. Isometric drawing not to scale.
Les données sont sujettes à changement sans préavis.

HAMMOND MANUFACTURING®

www.hammondmfg.com

**PART NO. RCHV1902224BK1**