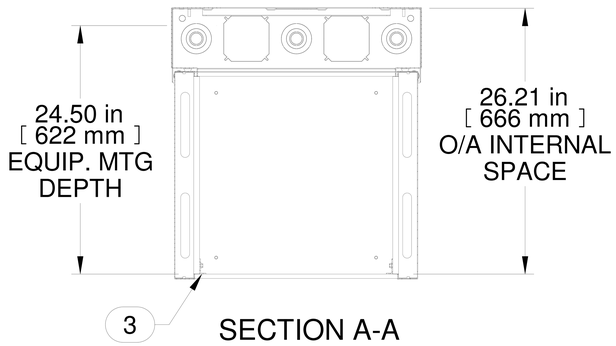

SECTION A-A

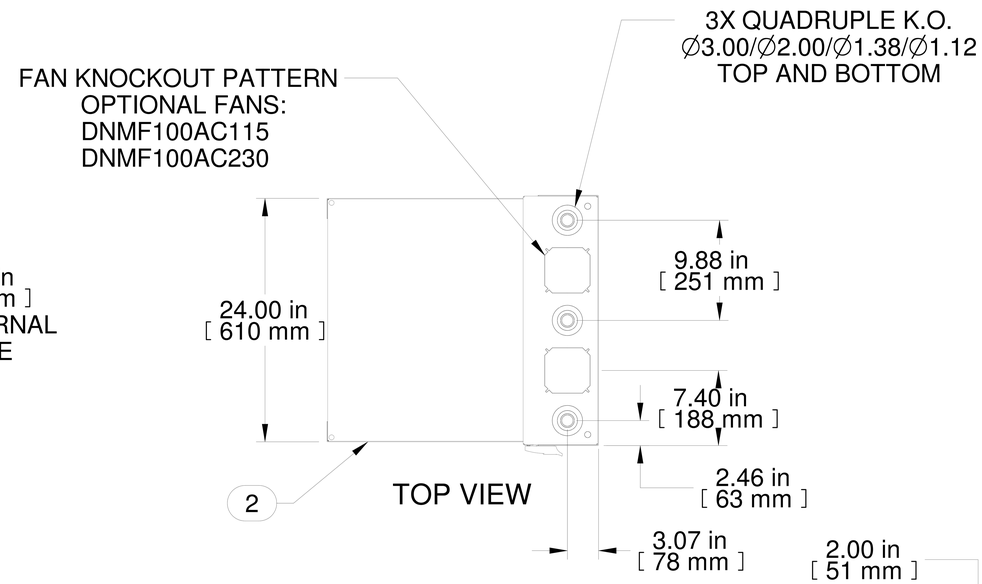

TOP VIEW

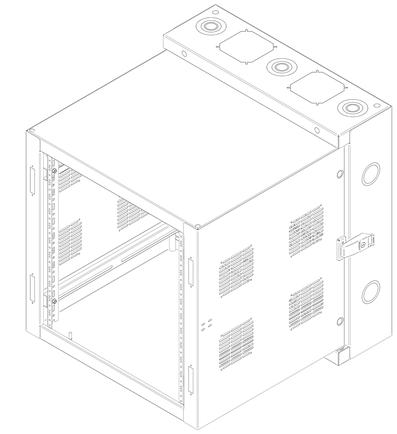

ISOMETRIC

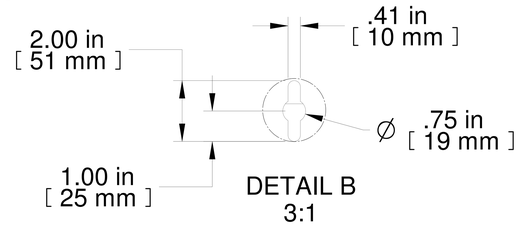

DETAIL B
3:1

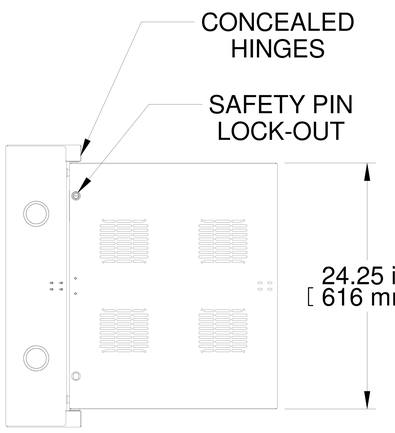

L.S. VIEW

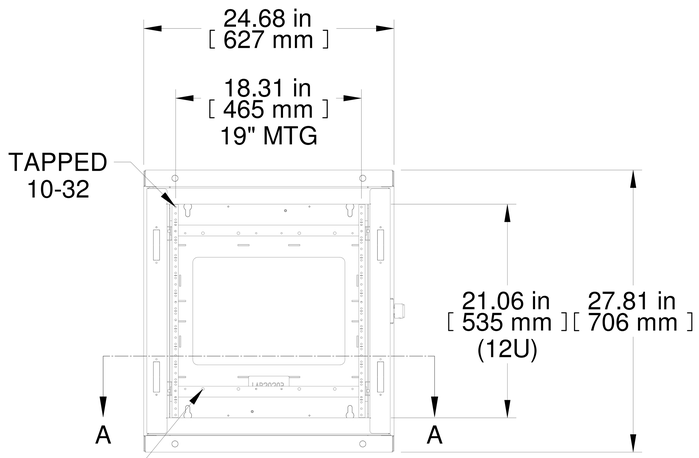

FRONT VIEW

POWER BAR
MOUNTING
WITHOUT USING
'U' SPACE

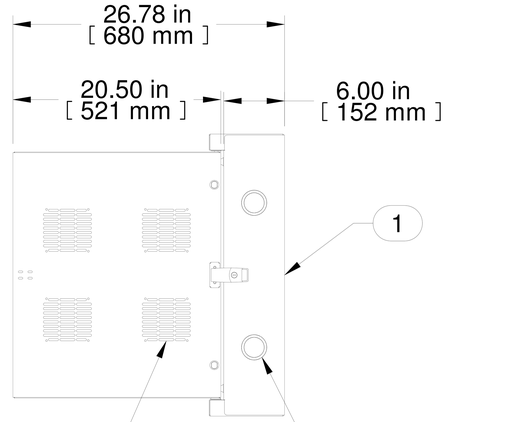

R.S. VIEW

FAN CUTOUT PATTERN
OPTIONAL FANS:
DNMF100AC115
DNMF100AC230

2X
DOUBLE K.O.
∅2.00/∅2.50
BOTH SIDES

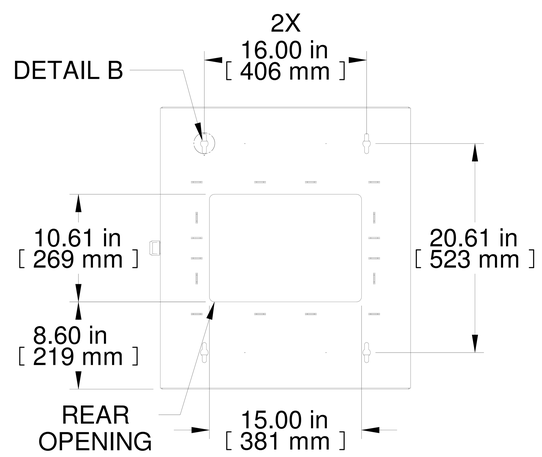

REAR VIEW

Item Number	Title	Quantity
1	HWC - REAR MOUNT ASSY	1
2	HWC - CENTRE SECTION	1
3	URR RAIL	2
4	WITH CAM COM57366	1

PART NUMBERS

HWC2412U27BK PAINTED BLACK SAND TEXTURED

NOTES

Door Not Included
See Hammond Website for Additional Accessories

Français

Pour tous les détails sur nos produits,
svp veuillez consulter notre site www.hammondmfg.com

Data subject to change without notice. Isometric drawing not to scale.
Les données sont sujettes à changement sans préavis.

HAMMOND MANUFACTURING®

www.hammondmfg.com

PART NO. HWC2412U27BK