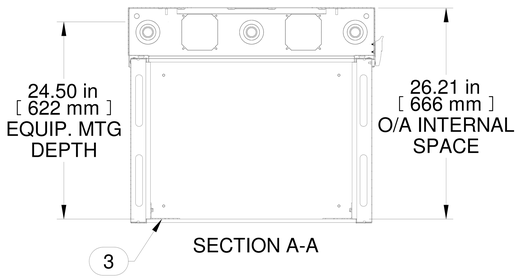

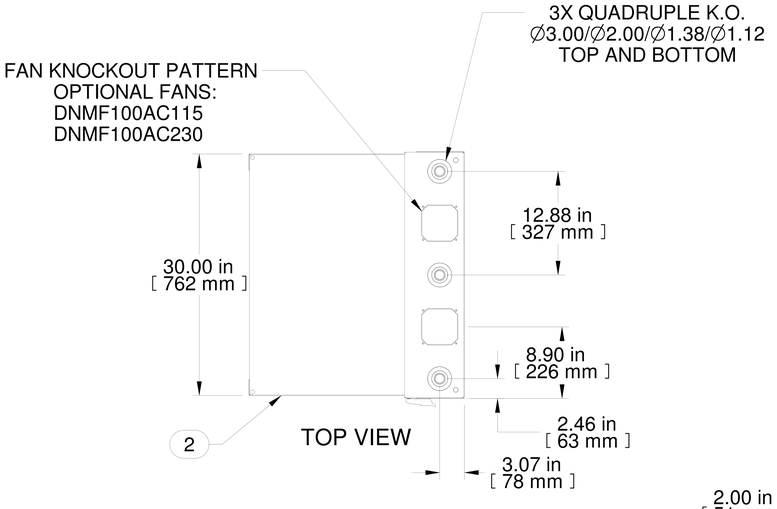

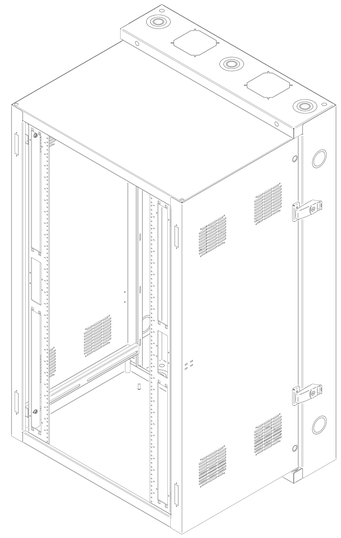

ISOMETRIC

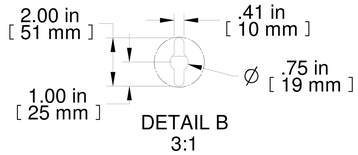

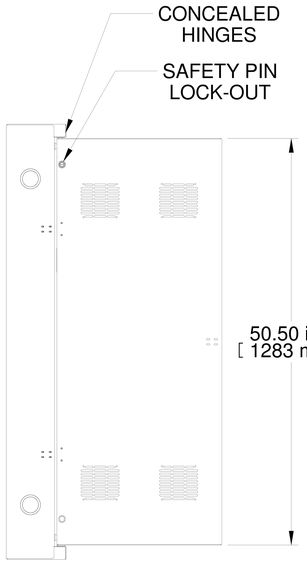

L.S. VIEW

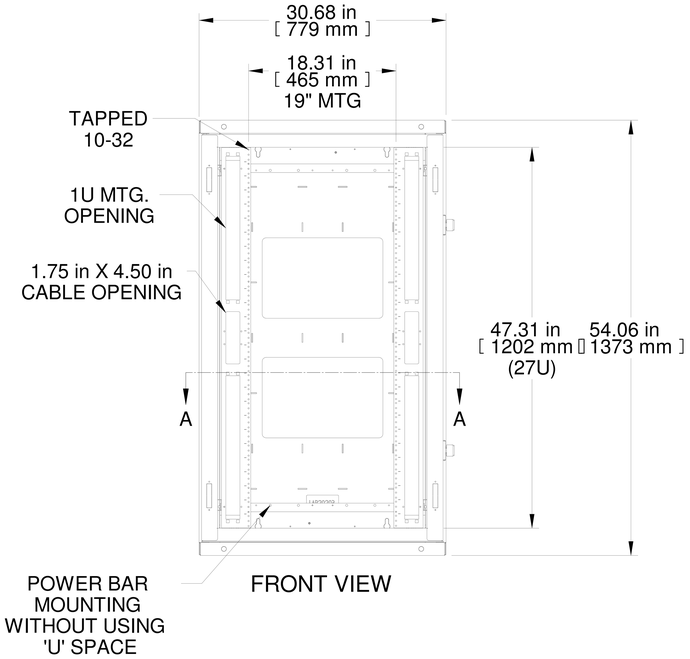

FRONT VIEW

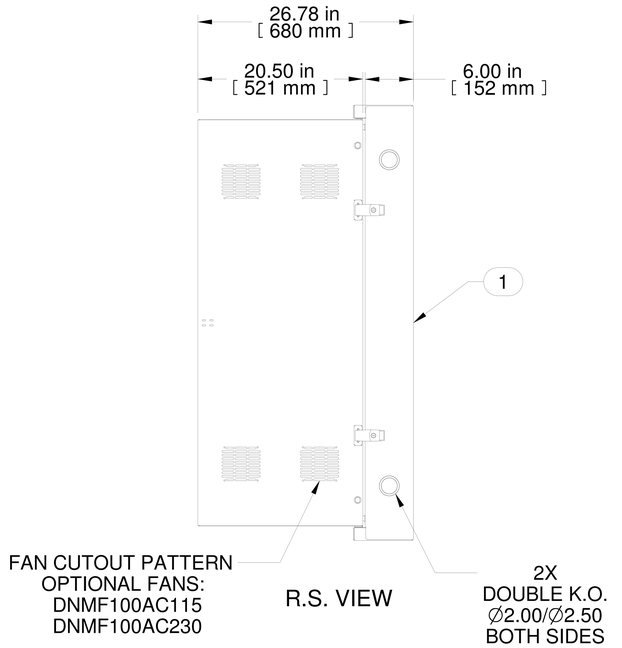

R.S. VIEW

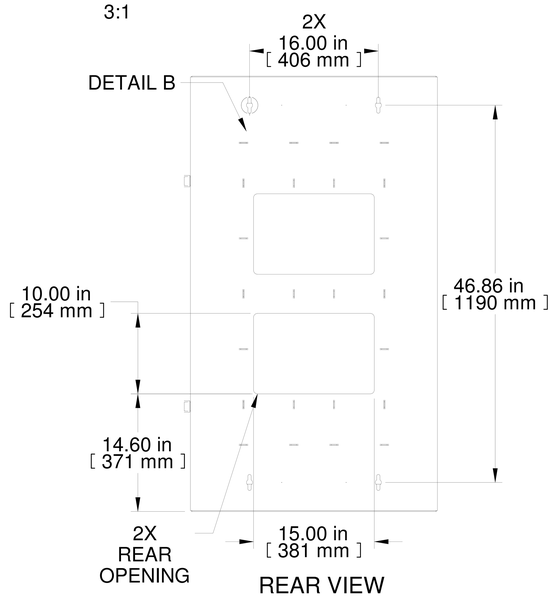

REAR VIEW

Item Number	Title	Quantity
1	HWC - REAR MOUNT ASSY	1
2	HWC - CENTRE SECTION	1
3	HWC RAIL - TAPPED	2
4	WITH CAM COM57366	1

PART NUMBERS

HWC3027U27BK PAINTED BLACK SAND TEXTURED

NOTES

Door Not Included

See Hammond Website for Additional Accessories

Français

Pour tous les détails sur nos produits,
svp veuillez consulter notre site www.hammondmfg.com

Data subject to change without notice. Isometric drawing not to scale.
Les données sont sujettes à changement sans préavis.

HAMMOND MANUFACTURING®

www.hammondmfg.com

PART NO. HWC3027U27BK