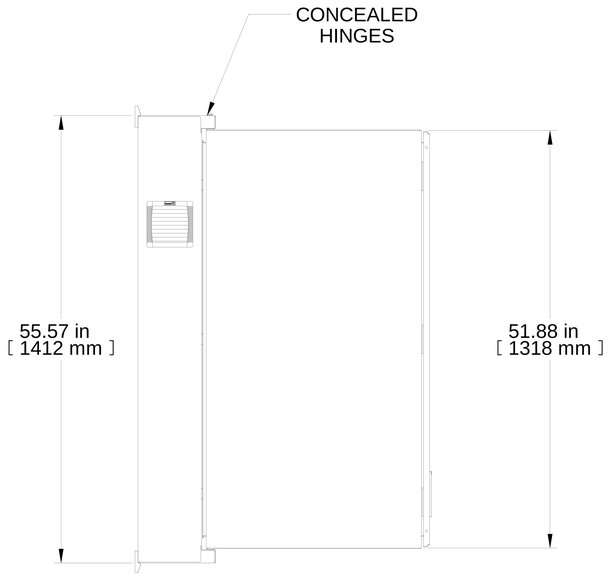

L.S. VIEW

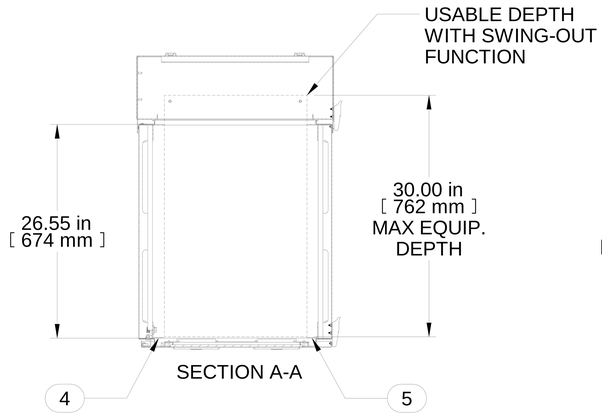

SECTION A-A

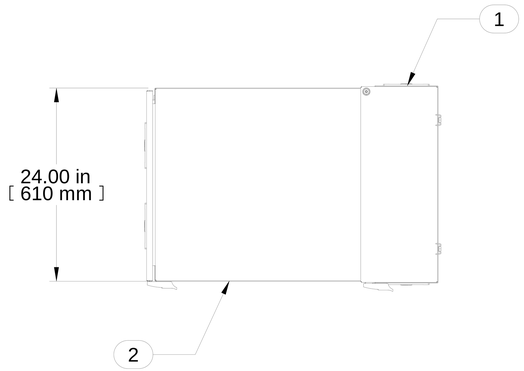

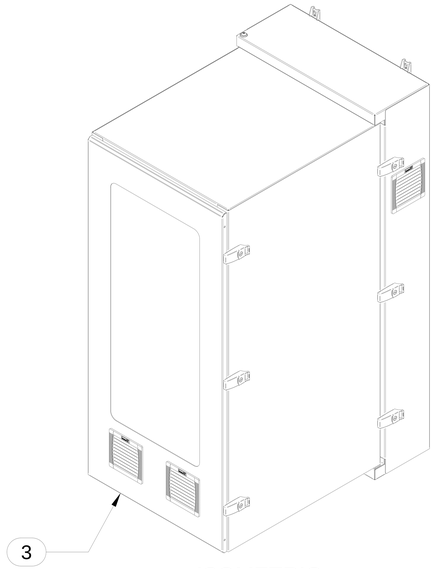

ISOMETRIC

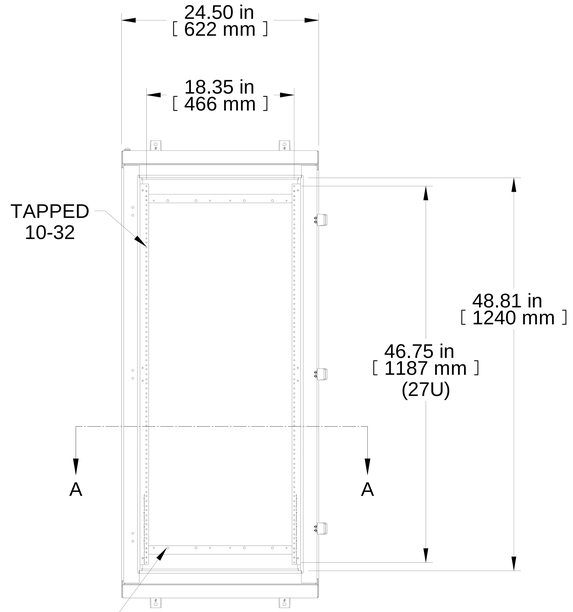

FRONT VIEW

POWER BAR
MOUNTING
WITHOUT USING
'U' SPACE

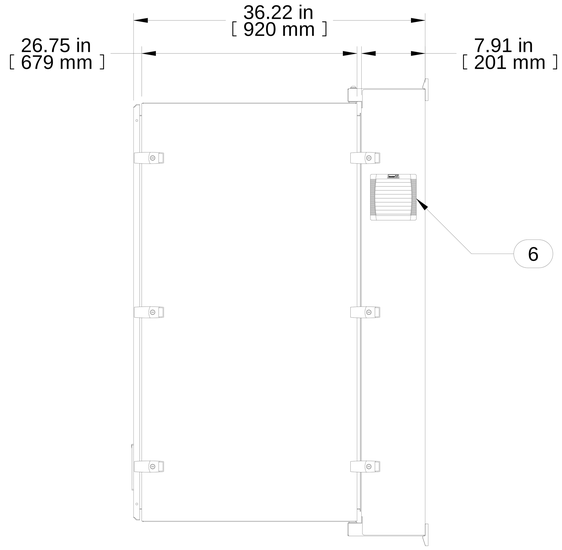

R.S. VIEW

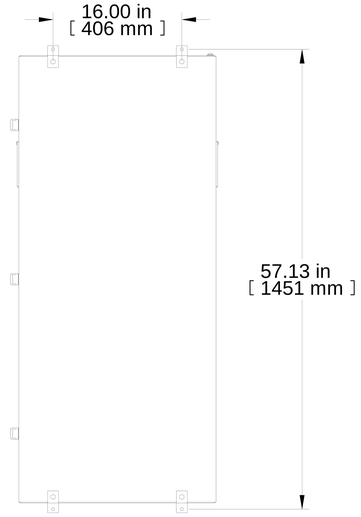

REAR VIEW

Item Number	Title	Quantity
1	24W 27U NWC - REAR ASSY	1
2	24W 27U NWC - CENTRE	1
3	24W 12U NWC - WINDOW DOOR	1
4	H1 PANEL RAIL LH	2
5	H1 PANEL RAIL RH	2
6	6" EXHAUST FILTER T12	4

PART NUMBERS

NWC27U2436WF	PAINTED BLACK TEXTURED

NOTES

Window Door Included, Filters Ship Inside Cabinet

See Hammond Website for Additional Accessories

Français

Pour tous les détails sur nos produits,
svp veuillez consulter notre site www.hammondmfg.com

Data subject to change without notice. Isometric drawing not to scale.
Les données sont sujettes à changement sans préavis.

HAMMOND MANUFACTURING®

www.hammondmfg.com

PART NO. NWC27U2436WFBK